Current part is item (15) on diagram. Available at www.oshkoshequipment.com

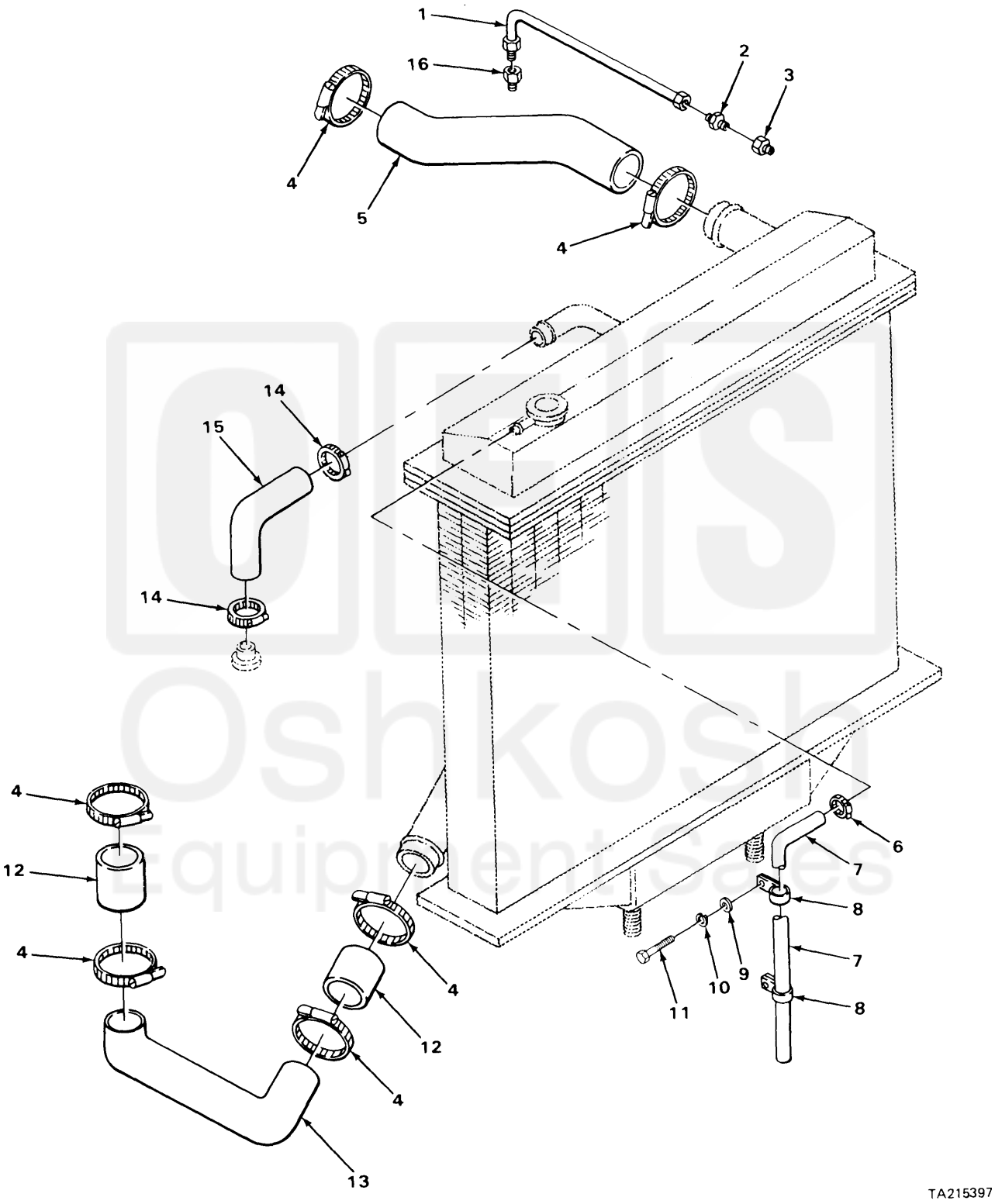

FIGURE 24. RADIATOR LINES, FITTINGS AND HOSES.

Current part is item (15) on diagram. Available at www.oshkoshequipment.com

Current part is item (15) on diagram. Available at www.oshkoshequipment.com

(1) ITEM NO	(2) SMR CODE	(3) FSCM	(4) PART NUMBER	(5) DESCRIPTION AND USABLE ON CODE (UOC)	(6) QTY
				GROUP:0503 WATER MANIFOLD,HEADERS, THERMOSTATS AND HOUSING GASKET	
				FIGURE 24. RADIATOR LINES, FITTINGS AND HOSES.	
1	PAOZZ	34623	M/145-20044	HOSE ASSEMBLY,NONME	1
2	PAOZZ	96906	MS39158-7	ADAPTER,STRAIGHT,PI MALE	1
3	PAOZZ	02413	130-S-1993	BUSHING,PIPE	1
4	PAOZZ	76599	4844-SS	CLAMP,HOSE	6
5	PAOZZ	34623	MC147-20000	HOSE,PREFORMED	1
6	PAOZZ	76599	GS-4SS	CLAMP,HOSE	1
7	PAOZZ	61463	5139-5/16	HOSE,NONMETALLIC	1
8	PAOZZ	21450	128281	CLIP,TUBING	2
9	PAOZZ	96906	MS27183-13	WASHER,FLAT	2
10	PAOZZ	24617	9417953	WASHER,LOCK	2
11	PAOZZ	72582	9428477	PLUG,EXPANSION	2
12	MOOZZ	34623	MB147-20001	HOSE MAKE FROM P/N MS521302A221184	2
13	PAOZZ	34623	MD319-20002	TUBE,BENT,METALLIC	1
14	PAOZZ	76599	4816-SS-305	CLAMP,HOSE	2
15	PAOZZ	96906	MS521301B206R	HOSE,PREFORMED	1
16	PAOZZ	30379	119928	BUSHING,PIPE	1
				END OF FIGURE	

Current part is item (15) on diagram. Available at www.oshkoshequipment.com